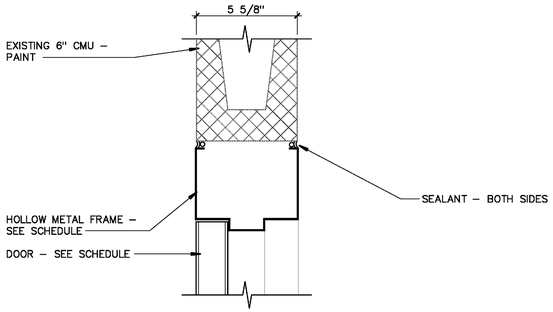

1 HLW MTL DOOR HEAD DETAIL
SCALE: 3"=1'-0"

NOTE: CONTRACTOR SHOULD BE ABLE TO OBTAIN TWO 16" SILL PIECES FROM EACH SOLID 4" X 8" X 16" CMU

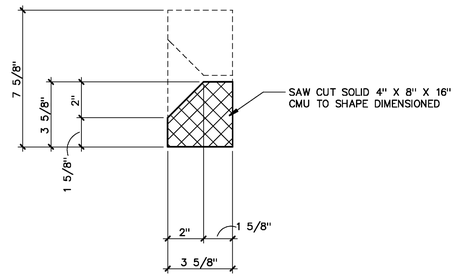

2 CMU SILL PROFILE
SCALE: 3"=1'-0"

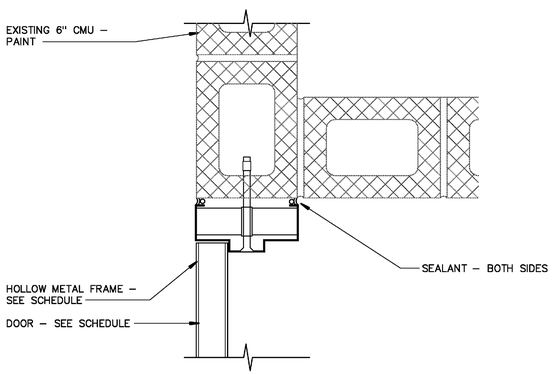

5 HLW MTL DOOR JAMB DETAIL
SCALE: 3"=1'-0"

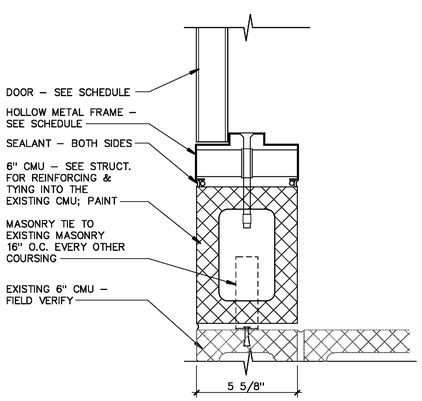

9 HLW MTL DOOR JAMB DETAIL
SCALE: 3"=1'-0"

Stocks Mann Architects, PLC
401 W. CAPITOL, SUITE 402
LITTLE ROCK, AR 72201
501-370-9207 501-370-9208 (FAX)

CONSULTANTS

DCI, Inc.
Civil Engineer

ROBBINS ENGINEERING
Structural Engineer

TME, LLC.
MEPF Engineer

STOCKS - MANN ARCHITECTS, PLC
REGISTERED ARCHITECTS
No. LL-1
ARKANSAS
7-1-16

Fire Station Renovation and Police Station Addition

Buliding 7200 - Camp Joseph T. Robinson
North Little Rock, Arkansas

REVISIONS

ISSUE DATE
JULY 1, 2016

PROJECT NO.
0901U

CONTENTS
WINDOW AND DOOR DETAILS

SHEET NUMBER

A4.4